rainco

MINIMAL DESIGN, SECURE SUPPORT

# SHOWER GLASS CLAMP

## AT A GLANCE

| BEST FOR | MATERIAL | INSTALLATION |
| --- | --- | --- |
| Connecting a frameless shower door directly to a fixed glass panel | Crafted from Stainless Steel 304 | - |

rainco

Front View · Side View

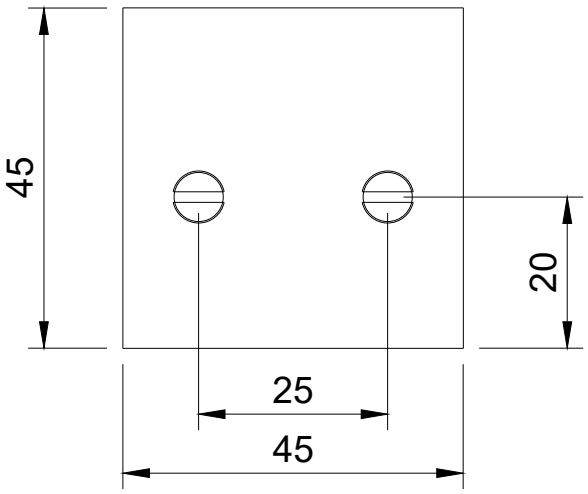


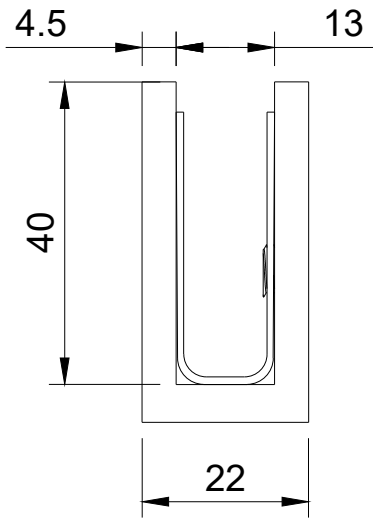


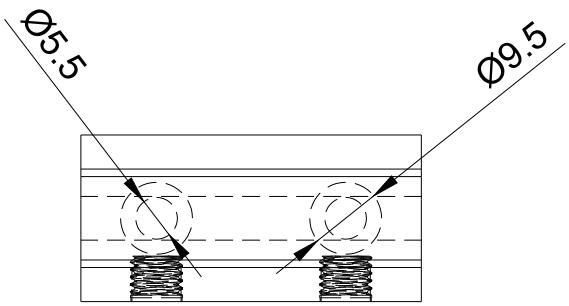


## Specifications

MATERIAL

Stainless **304** Steel

GLASS

**Suitable glass** Flat or curved toughened safety glass · Stated glass thickness **8–12 mm** · **Glass retention** Two clamp screws

MOUNTING

Two structural wall fixings

REQUIRED WALL

Solid or suitably reinforced structure

THICKNESS

Clamp body thickness **4.5 mm**

INTERNAL GLASS

Internal glass opening **13 mm**

FIXING-HOLE

Fixing-hole centres **25 mm** · Fixing-hole height **20 mm** · Through-hole diameter **Ø5.5 mm**

DIMENSIONS

Overall size **45×45 mm** · Overall depth **22 mm** · Counterbore diameter **Ø9.5 mm**

rainco

# Exploded View

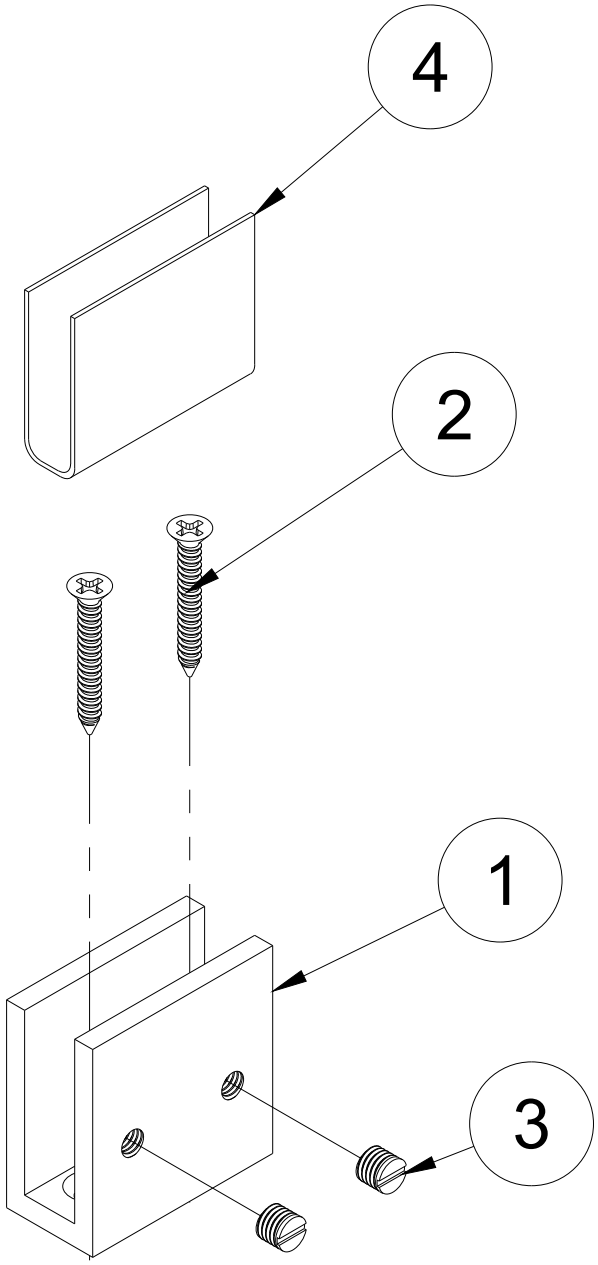


## What's in the box

INCLUDED

| | |
|---|---|
| **1x** | Glass clamp body |
| **1x** | Protective glass gasket |
| **2x** | Wall mounting screws |
| **2x** | Glass clamp screws |

EXPLODED VIEW

1. Glass clamp body
2. Wall mounting screws
3. Glass clamp screws
4. Protective glass gasket

## Finish Options

| **Antique Brass** | **Brushed Nickel** | **Brushed Brass** | **Brushed Copper** | **Gun Metal** |
|---|---|---|---|---|
| AEA | AEA | PVD | PVD | PVD |

rainco

## Installation Guide

PLUMBER REQUIRED AS/NZS 3500

01 **Mark the position**

Position the clamp and mark the two wall fixing holes. Confirm the supporting surface is solid, plumb and suitable for the glass load.

02 **Fix the clamp body**

Drill the holes using a suitable bit and install appropriate structural fixings. Secure the clamp body to the wall.

03 **Position the glass**

Place the protective gasket inside the clamp and support the glass in its final position. Ensure there is no direct metal-to-glass contact.

04 **Secure the glass**

Insert and tighten both clamp screws evenly. Do not overtighten or place uneven pressure on the glass.

**FINAL CHECK · TURN ON & TEST**

Confirm the glass is plumb, stable and correctly seated within the clamp.

## Care & Maintenance

MILD SOAP & WARM WATER

Clean with mild soap and warm water.

SOFT CLOTH ONLY

Use soft cloth only.

NO CITRUS, BLEACH OR ABRASIVE CLEANERS

These can damage the surface and affect longevity

## Compliance

WATERMARK CERTIFIED

AS/NZS 3718

WELS APPROVED

-

NCC LEAD-FREE

LESS THAN 0.25%

INSTALLATION STANDARD

AS/NZS 3500.1 & 3500.4