rainco

FLEXIBLE REACH. EVERYDAY COMFORT

ROUND HAND SHOWER WAND

AT A GLANCE

BEST FOR	FEEL	INSTALLATION
Rinsing, cleaning, and a more versatile showering experience	Two functions: full spray and focused jet spray	Wall-mounted

rainco

Front View · Side View

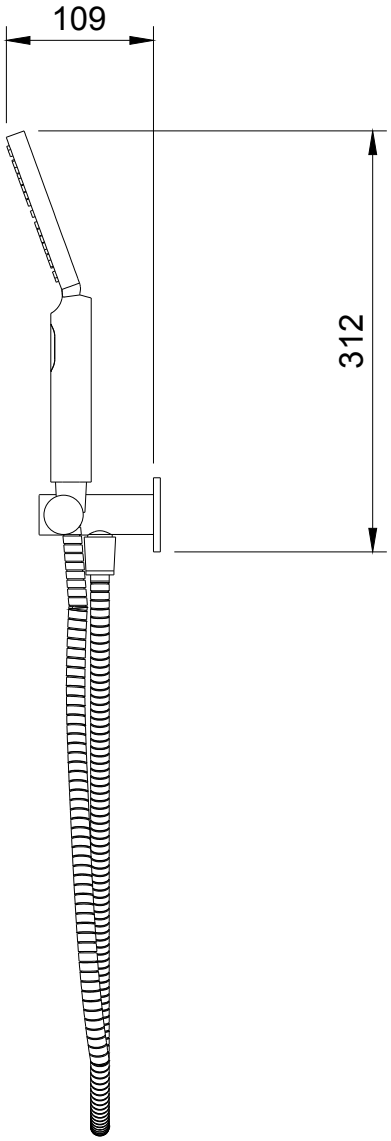

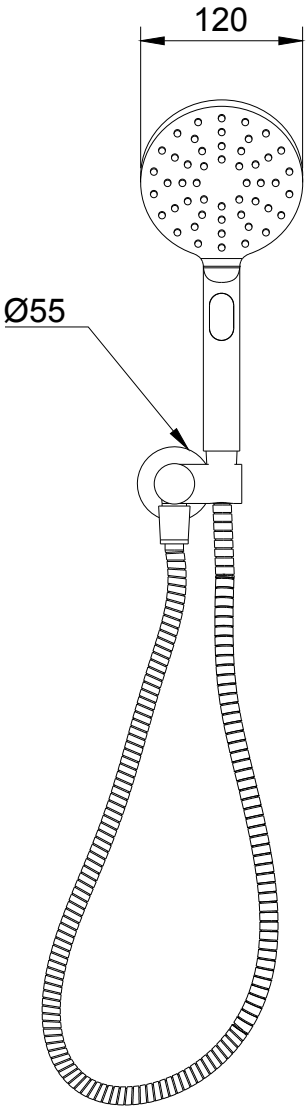

Specifications

MATERIAL

Solid **Brass**

FLOW RATE

8 L/min · WELS 3 Star

PRESSURE RANGE

50–800 kPa

CONNECTIONS

Standard **G1/2”**

MOUNTING

Concealed wall fixings

DIMENSIONS

Flexir hose length **150 cm** · Shower Wand Width **120 mm** · Wall projection **109 mm** · Cover Ring Diameter **Ø55 mm**

rainco

Exploded View

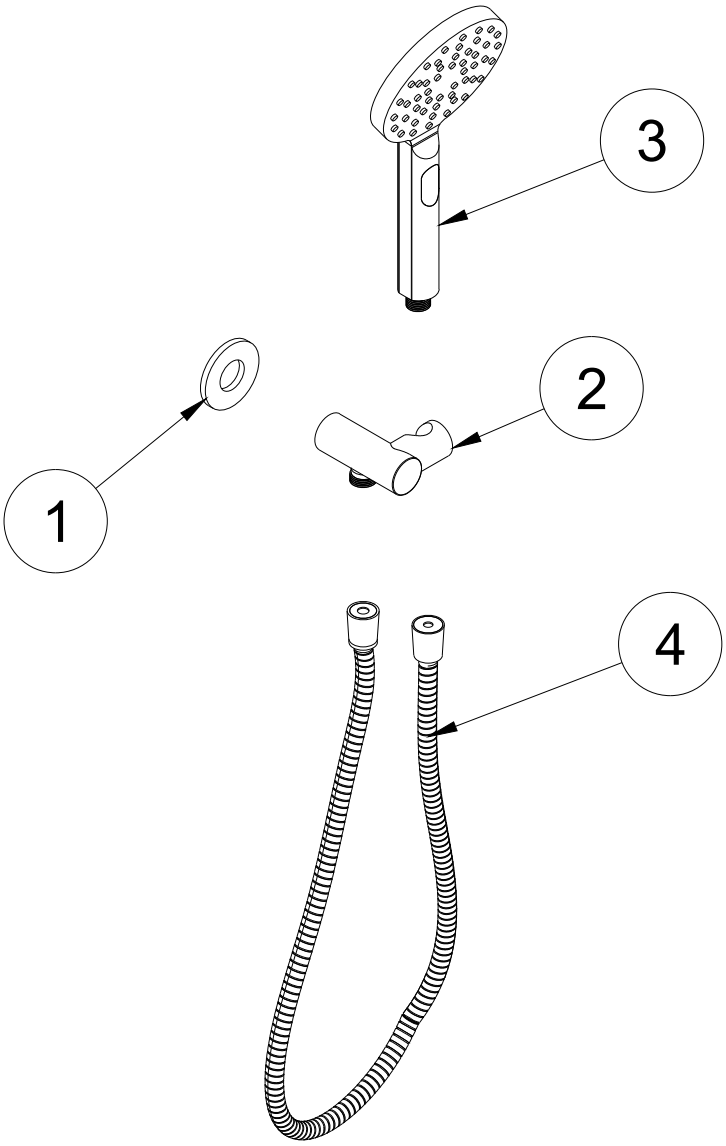

What's in the box

INCLUDED

1x	Shower wand
1x	Shower Bracket
1x	Cover ring
1x	150cm flexir hose
1x	Spare rubber washer
1x	Spare grub screw
1x	Mini hex wrench

EXPLODED VIEW

1. Cover ring
2. Shower Bracket
3. Round hand wand
4. 150cm Flexir hose

Finish Options

Antique Brass	Brushed Nickel	Brushed Brass	Brushed Copper	Gun Metal
AEA	AEA	PVD	PVD	PVD

rainco

Installation Guide

PLUMBER REQUIRED AS/NZS 3500

01

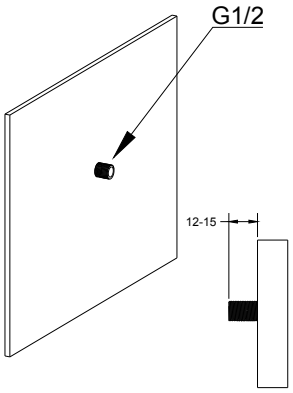

Prepare Accessories

Prepare all accessories according to the picture. Check that the water outlet is the correct size for the hand shower.

02

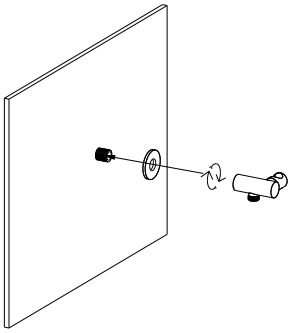

Install Shower Holder

Connect the shower holder and cover plate to the water outlet and tighten securely.

03

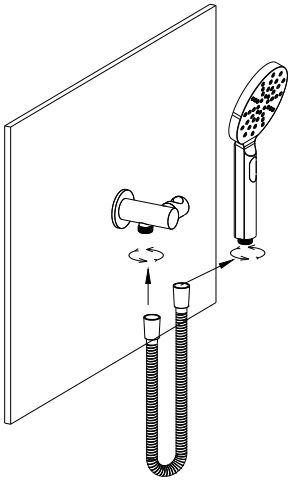

Connect Hose

Connect the hose to the threaded outlet on the shower holder and tighten securely.

04

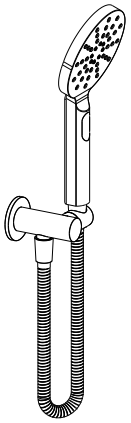

Test Hand Shower

Turn on the hand shower and check for any leaks. Take care not to damage the flow controller.

FINAL CHECK · TURN ON & TEST

Turn on the water supply and test for correct operation and leaks.

Care & Maintenance

MILD SOAP & WARM WATER

Clean with mild soap and warm water.

SOFT CLOTH ONLY

Use soft cloth only.

NO CITRUS, BLEACH OR ABRASIVE CLEANERS

These can damage the surface and affect longevity

Compliance

WATERMARK CERTIFIED

AS/NZS 3718

WELS APPROVED

3 STAR · 8 L/MIN

NCC LEAD-FREE

LESS THAN 0.25%

INSTALLATION STANDARD

AS/NZS 3500.1 & 3500.4