rainco

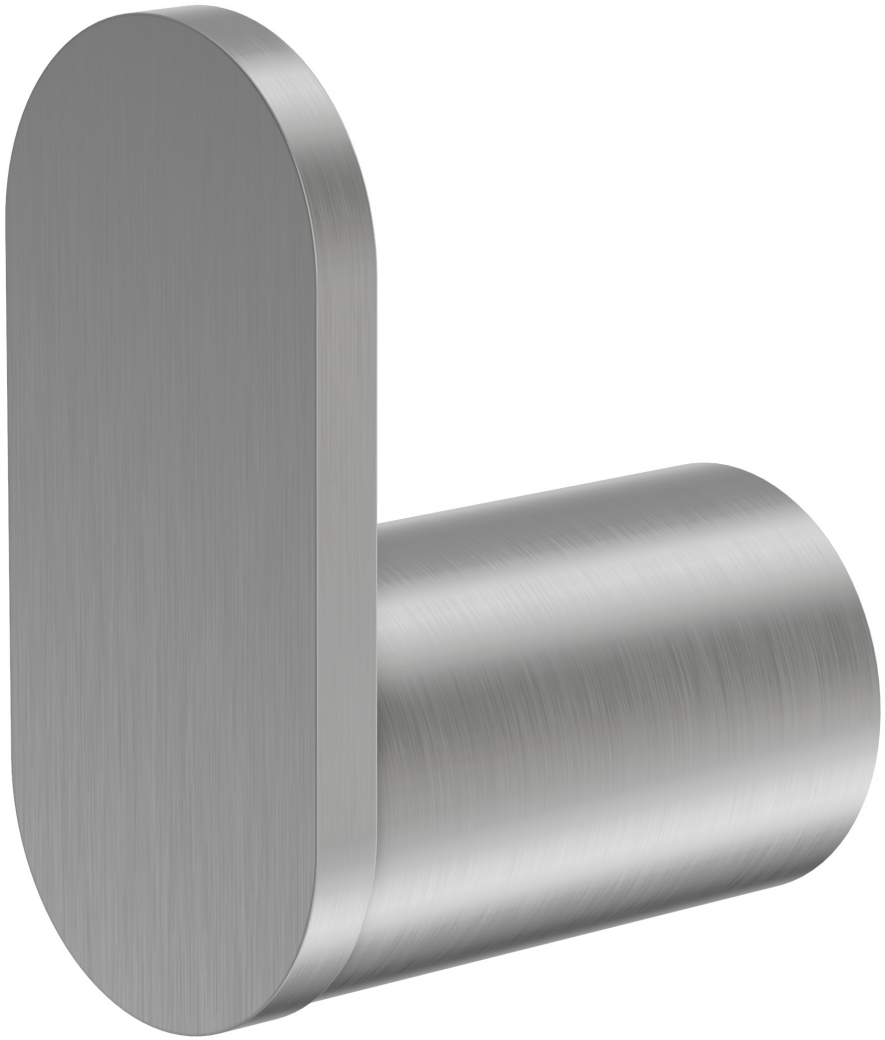

SIMPLE STORAGE, REFINED DESIGN

ROBE HOOK

AT A GLANCE

BEST FOR	MATERIAL	INSTALLATION
Keeping robes, towels and clothing conveniently within reach	Crafted from Stainless Steel 304	Wall mounted

rainco

Front View · Side View

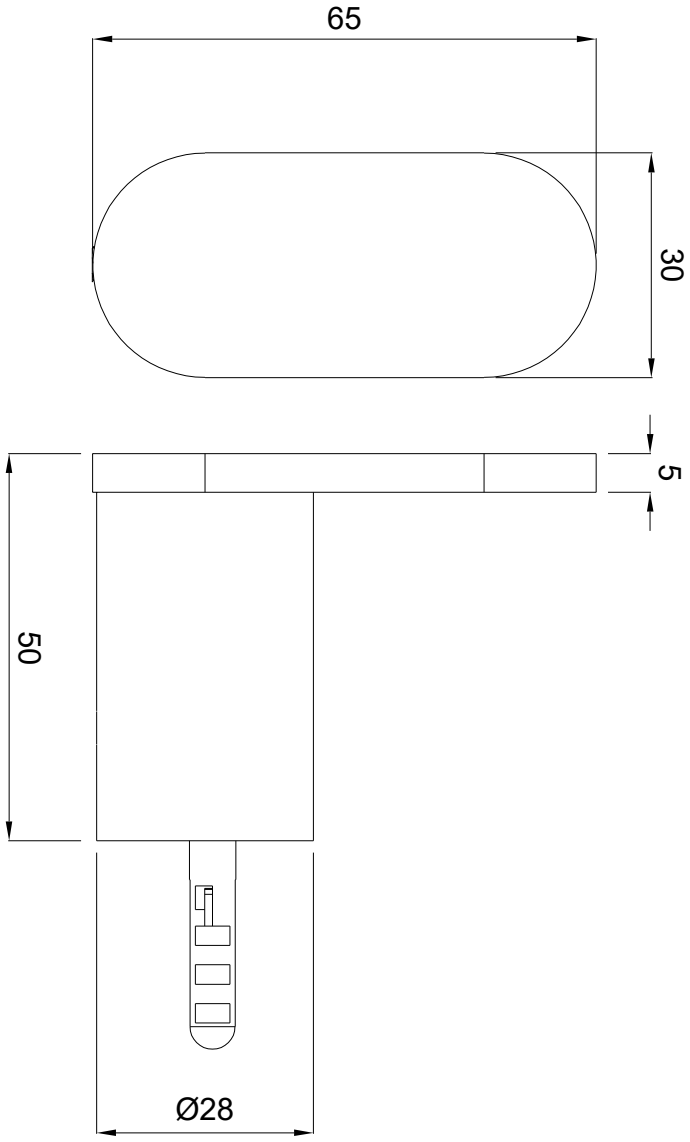

Specifications

MATERIAL

Stainless **304** Steel

MOUNTING

Concealed wall fixings

DIMENSIONS

Overall height **65 mm** · Overall width **30 mm** · Wall projection **50 mm** · Hook height **28 mm**

rainco

Exploded View

What's in the box

INCLUDED

1x	Robe hook
1x	Concealed mounting plate
2x	Wall-fixing screws
2x	Wall plugs
1x	Grub screw
1x	Allen key

EXPLODED VIEW

1. Concealed mounting plate
2. Wall fixing screws
3. Robe Hook
4. Grub screw
5. Allen Key

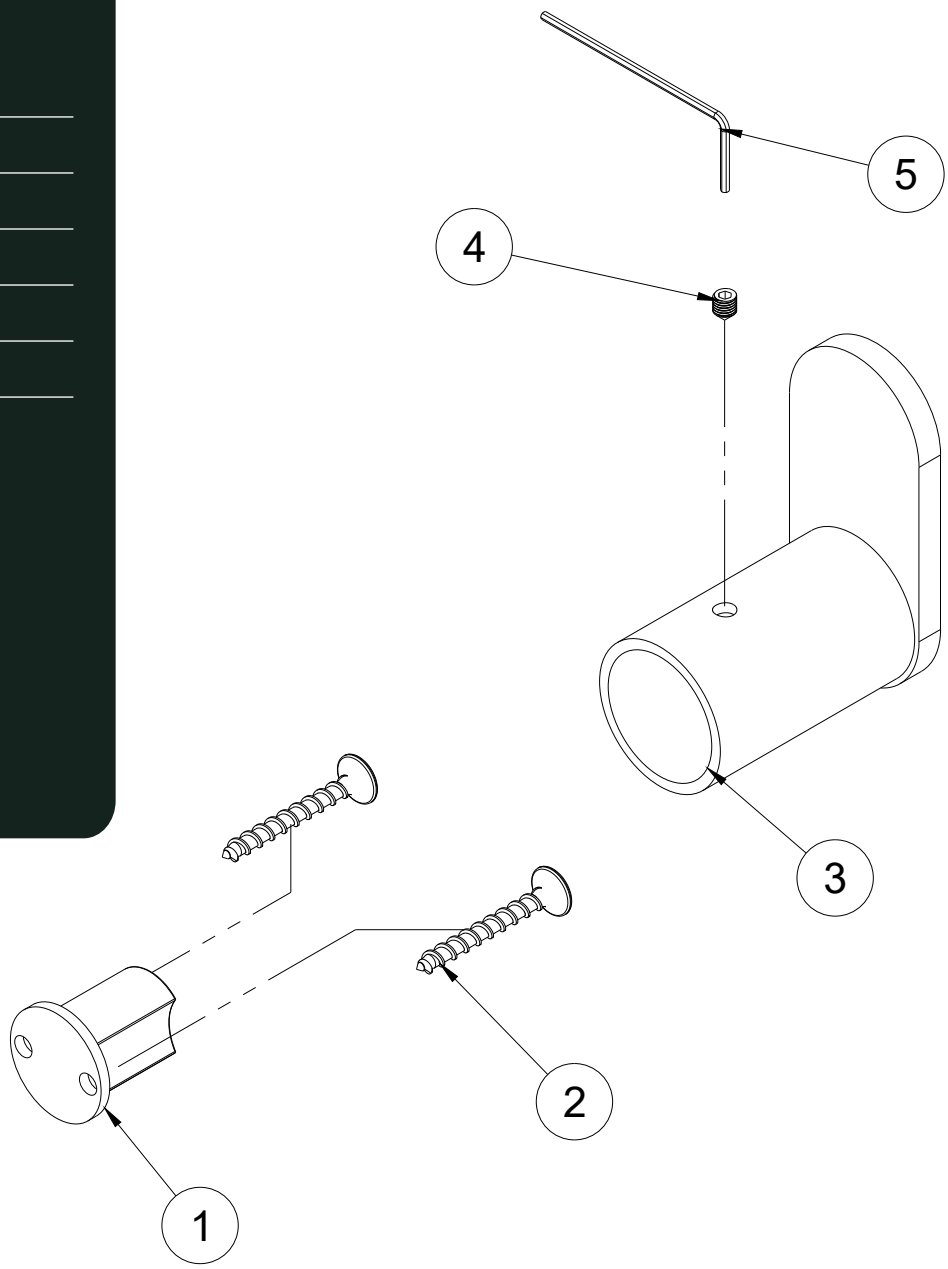

Finish Options

Antique Brass	Brushed Nickel	Brushed Brass	Brushed Copper	Gun Metal
AEA	AEA	PVD	PVD	PVD

rainco

Installation Guide

PLUMBER REQUIRED AS/NZS 3500

01

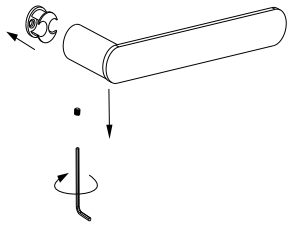

Mark the position

Choose the installation height and check for concealed services. Remove the mounting plate using the supplied Allen key.

02

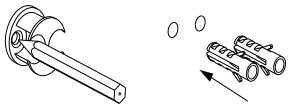

Drill the holes

Hold the mounting plate against the wall, mark the fixing holes and drill using a suitable bit.

03

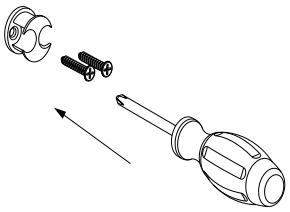

Secure the plate

Insert suitable wall plugs and screw the mounting plate securely to the supporting wall.

04

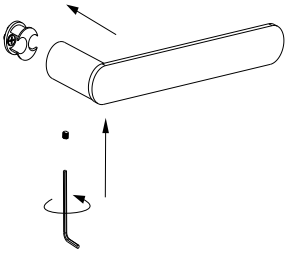

Fit the robe hook

Position the hook over the mounting plate and tighten the concealed grub screw. Check that it is straight and secure.

FINAL CHECK · DISCLAIMER

Do not place weight on the robe hook until every fixing is secure.

Care & Maintenance

MILD SOAP & WARM WATER

Clean with mild soap and warm water.

SOFT CLOTH ONLY

Use soft cloth only.

NO CITRUS, BLEACH OR ABRASIVE CLEANERS

These can damage the surface and affect longevity

Compliance

WATERMARK CERTIFIED

AS/NZS 3718

WELS APPROVED

-

NCC LEAD-FREE

LESS THAN 0.25%

INSTALLATION STANDARD

AS/NZS 3500.1 & 3500.4