rainco

A CLEAN GRIP FOR SLIDING SPACES

LOMBARDY SLIDING DOOR FLUSH PULL

AT A GLANCE

BEST FOR	MATERIAL	INSTALLATION
Internal sliding doors, cavity sliders, pocket doors and other applications requiring a low-profile handle	Crafted from Stainless Steel 304	Recessed

rainco

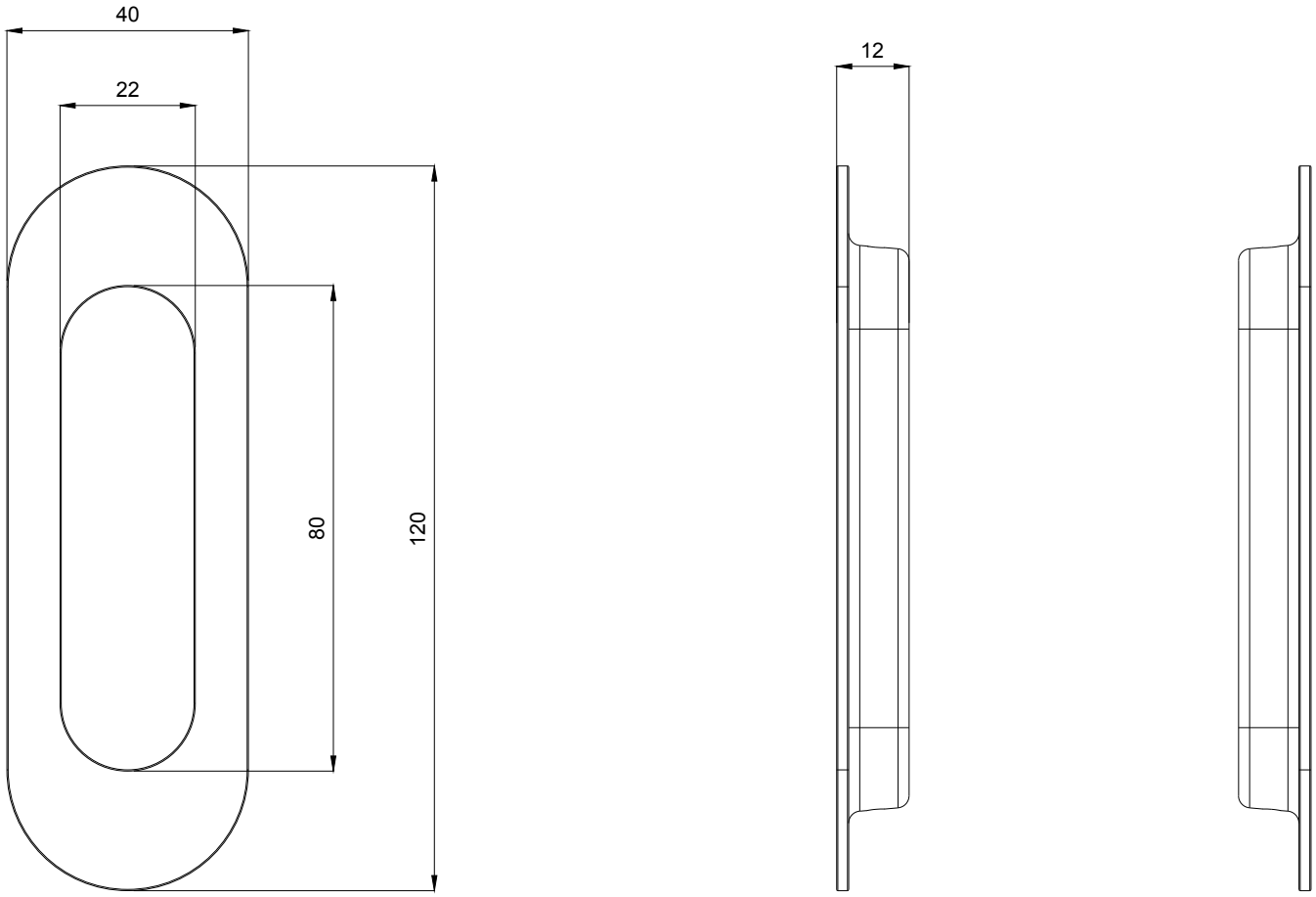

Specifications

MATERIAL

Crafted from **Stainless Steel 304**

INSTALLATION TYPE

Recessed

CONFIGURATION

Double-sided flush-pull pair · Oval profile · Low-profile faceplate

DIMENSIONS

Overall height **120 mm** · Overall width **40 mm** · Finger opening height **80 mm** · Finger opening width **22 mm** · Overall recess depth **12 mm** · Faceplate thickness **2 mm** · Recommended door cut-out **100x30 mm**

BODY

Concealed recessed body · Two fixing points per pull

rainco

3D View

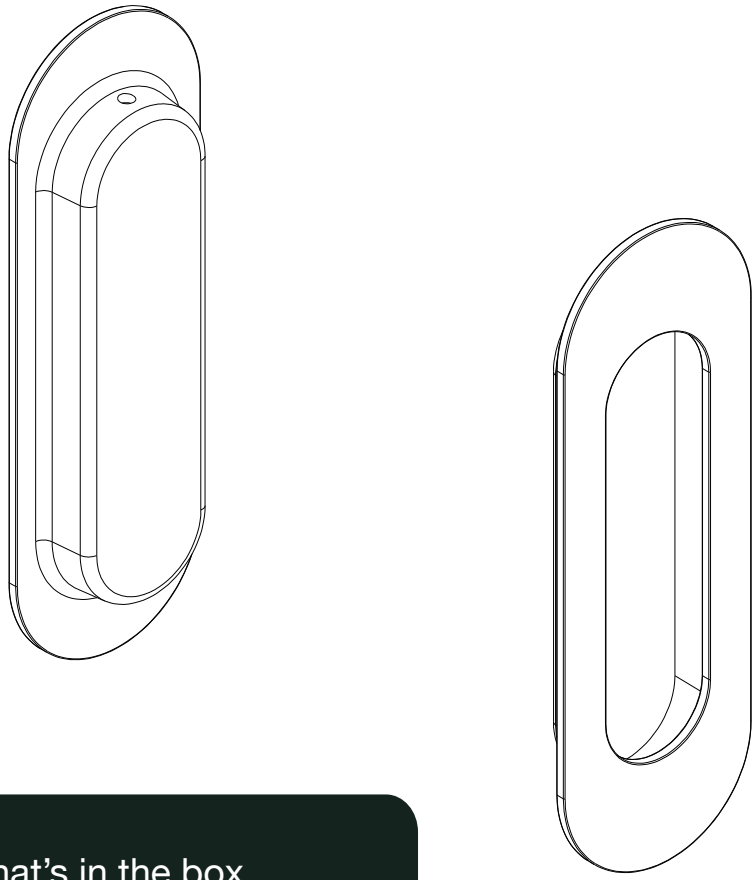

What's in the box

INCLUDED

2x	Sliding Door Flush Pulls
4x	Fixing screws

Finish Options

Antique Brass	Brushed Nickel	Brushed Brass	Brushed Copper	Gun Metal
AEA	AEA	PVD	PVD	PVD

rainco

Installation Guide

01

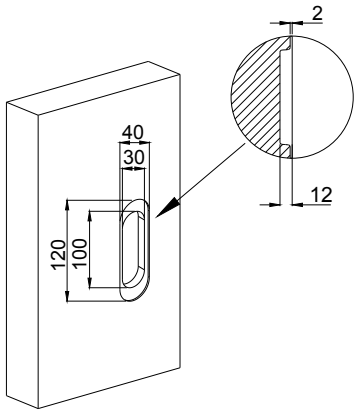

Mark and Cut

Mark a 100 × 30 mm opening at the desired height. Ensure the opening is straight, centred and clear of internal door components. Carefully cut the opening and clean the edges. Test-fit both pulls before fixing.

02

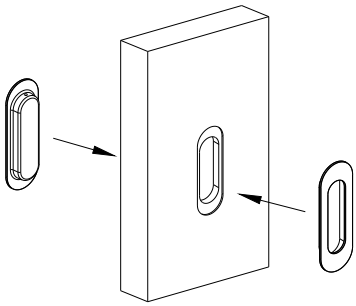

Fit the Flush Pulls

Position one flush pull on each side of the door. Ensure both recessed bodies fit squarely within the opening and the faceplates sit flat against the door surfaces.

03

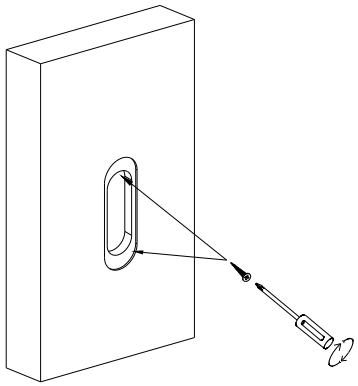

Secure and Test

Secure the pulls using the supplied screws. Tighten evenly without overtightening. Confirm both pulls are firm and the sliding door operates freely without the handles contacting the frame, wall or cavity.

FIT AND TEST · IMPORTANT

Verify all dimensions against the physical product before cutting. Check the door thickness before installing the pulls back-to-back. Protect finished surfaces while cutting and drilling. Do not overtighten the screws. Check for internal door framing, glazing or hardware before cutting. Test the door through its full travel after installation.

Care & Maintenance

MILD DETERGENT & WARM WATER

Clean regularly using warm water and mild detergent.

SOFT CLOTH ONLY

Clean and dry with a soft cloth only.

NO ACIDIC OR ABRASIVE CLEANERS

Do not use acidic cleaners, abrasive products, scouring pads or coarse brushes, as these may damage the finish.