rainco

DISCREET PROTECTION, LASTING STYLE

LOMBARDY DOOR STOP

AT A GLANCE

BEST FOR	MATERIAL	INSTALLATION
Internal doors requiring a compact and discreet floor-mounted stop	Crafted from Stainless Steel 304	Floor mounted

rainco

Side View

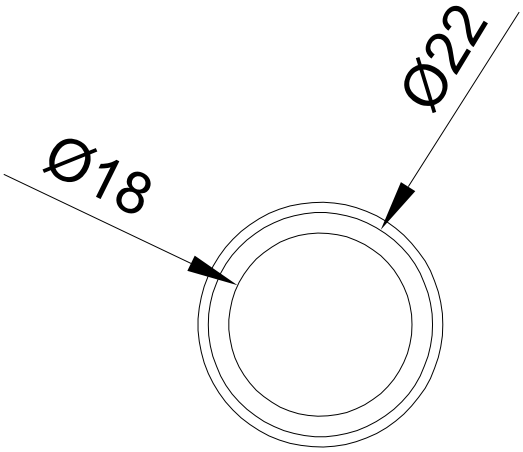

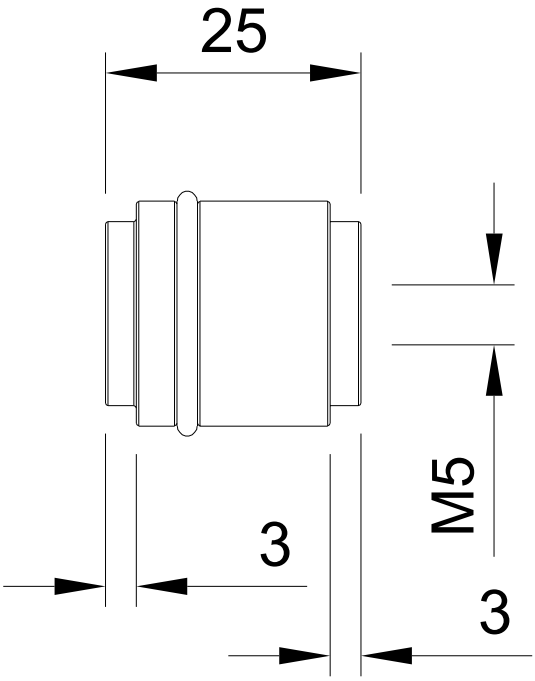

Specifications

MATERIAL

Crafted from **Stainless Steel 304**

INSTALLATION TYPE

Floor mounted

FIXING METHOD

Threaded fixing with expansion plug

MOUNTING

Suitable for appropriate solid mounting surfaces · Cushioned contact pad

DIMENSIONS

Overall diameter **22 mm** · Contact pad diameter **Ø18 mm** · Overall height **25 mm** · Threaded fixing **M5**

rainco

3D View

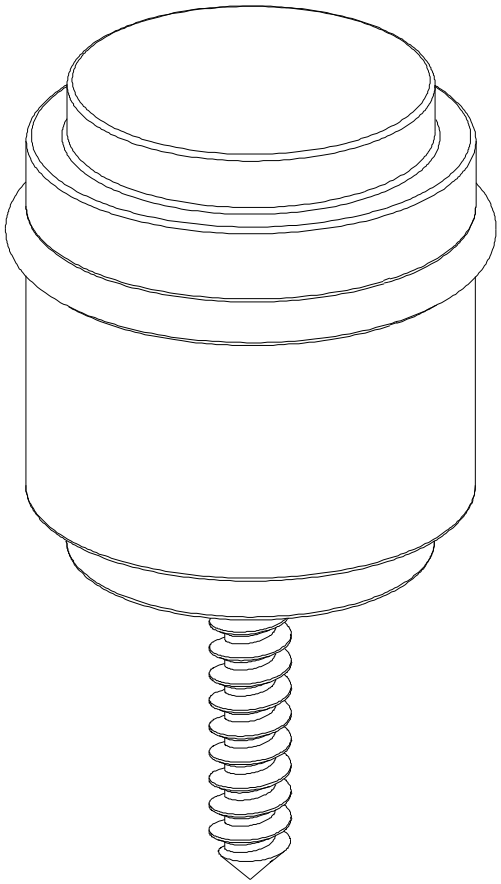

What's in the box

INCLUDED

1x	Lombardy Door Stop
1x	M5 threaded fixing stud
1x	Expansion plug

Finish Options

Antique Brass	Brushed Nickel	Brushed Brass	Brushed Copper	Gun Metal
AEA	AEA	PVD	PVD	PVD

rainco

Installation Guide

01

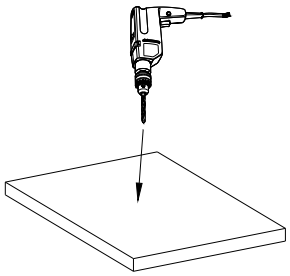

Position and mark

Open the door carefully and position the door stop where it will prevent the handle or door from contacting the wall. Mark the fixing point.

02

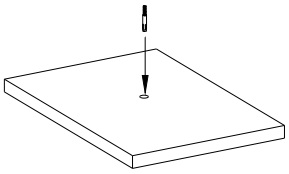

Drill the fixing hole

Drill a straight hole at the marked position to suit the supplied expansion plug. Remove all drilling dust.

03

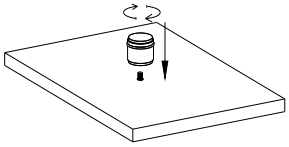

Install the door stop

Insert the expansion plug fully into the hole. Align the threaded fixing and screw the door stop clockwise into position until secure.

04

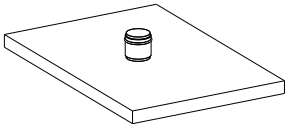

Check the installation

Confirm the door stop is firm and does not move. Open the door slowly and check that it contacts the protective pad correctly.

IMPORTANT

Use suitable fixings for the mounting surface and avoid overtightening or damaging finished surfaces. This product is designed only as a door stop and must not be used as structural support.

Care & Maintenance

CLEAN REGULAR

Clean regularly using warm water, mild detergent and a soft cloth.

SOFT CLOTH ONLY

Dry thoroughly after cleaning.

DO NOT USE

Do not use acidic cleaners, abrasive products, scouring pads or coarse brushes, as these may damage the finish.

Compliance

INSTALLATION STANDARD

AS/NZS 3500.1 & 3500.4