rainco

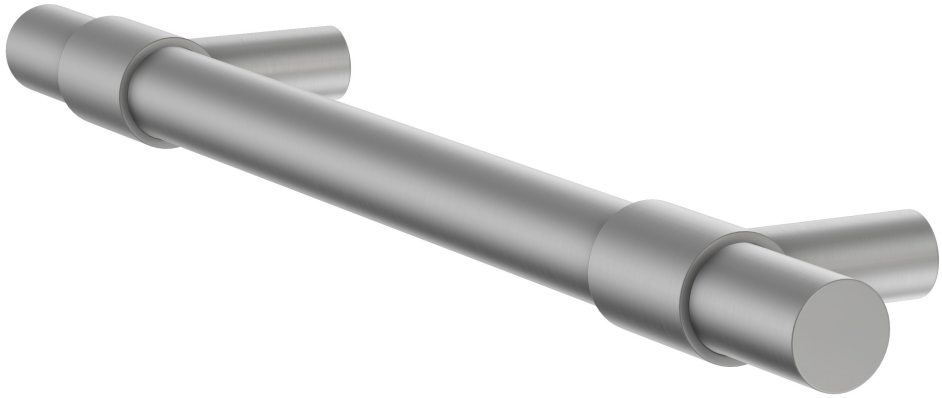

CLEAN LINES, CONFIDENT GRIP

LOMBARDY CABINETRY PULL HANDLE 200MM

AT A GLANCE

BEST FOR

Kitchen cabinets, bathroom vanities, wardrobes, drawers and other internal cabinetry

MATERIAL

Crafted from Stainless Steel 304

INSTALLATION

Rear-fixed

rainco

Side View

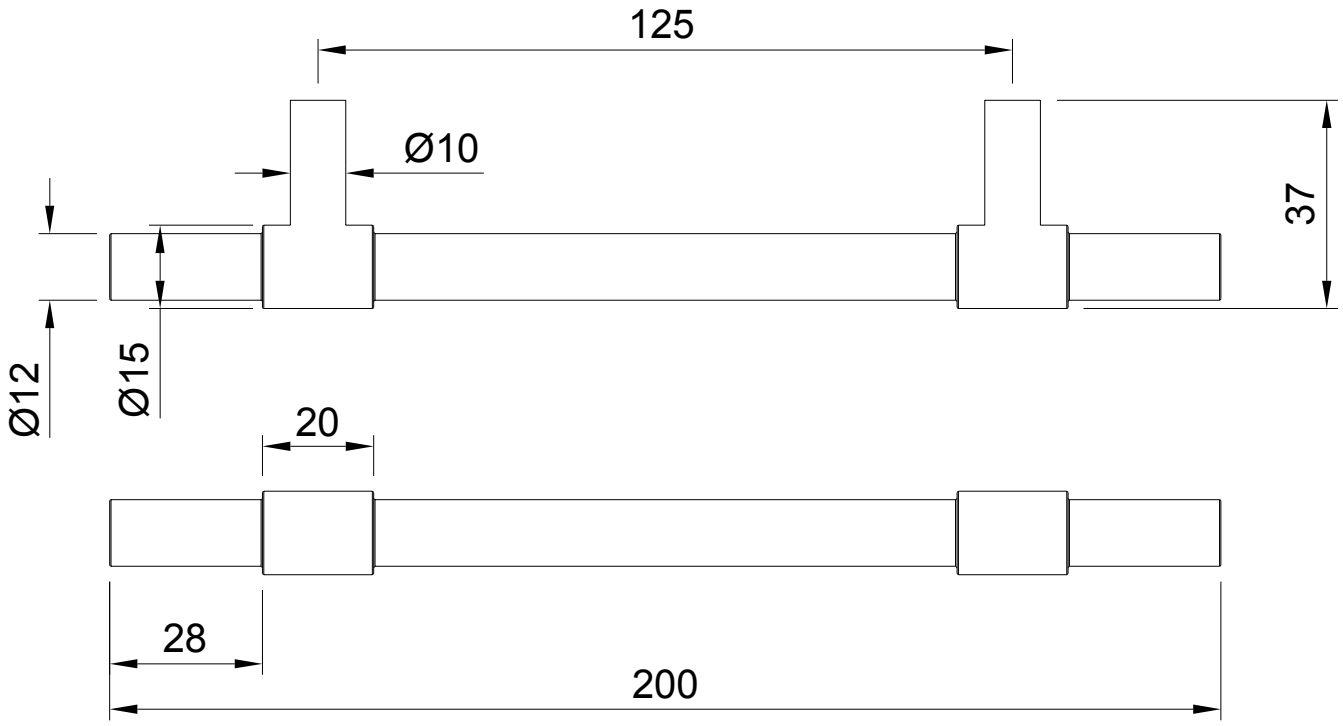

Specifications

MATERIAL

Crafted from **Stainless Steel 304**

INSTALLATION TYPE

Rear-fixed · Two-hole installation · Fixing centres **125 mm**

PROFILE

Cylindrical pull-handle profile · Suitable for cabinet doors and drawer fronts

DIMENSIONS

Overall length **200 mm** · Fixing-hole centres **125 mm** · Overall projection **37 mm** · Main handle diameter **Ø15 mm** · End-bar diameter **Ø12 mm** · Mounting-post diameter **Ø10 mm** · Mounting collar length **20 mm** · End overhang **28 mm**

FIXING-HOLE

Recommended fixing-hole diameter **Ø7 mm**

rainco

3D View

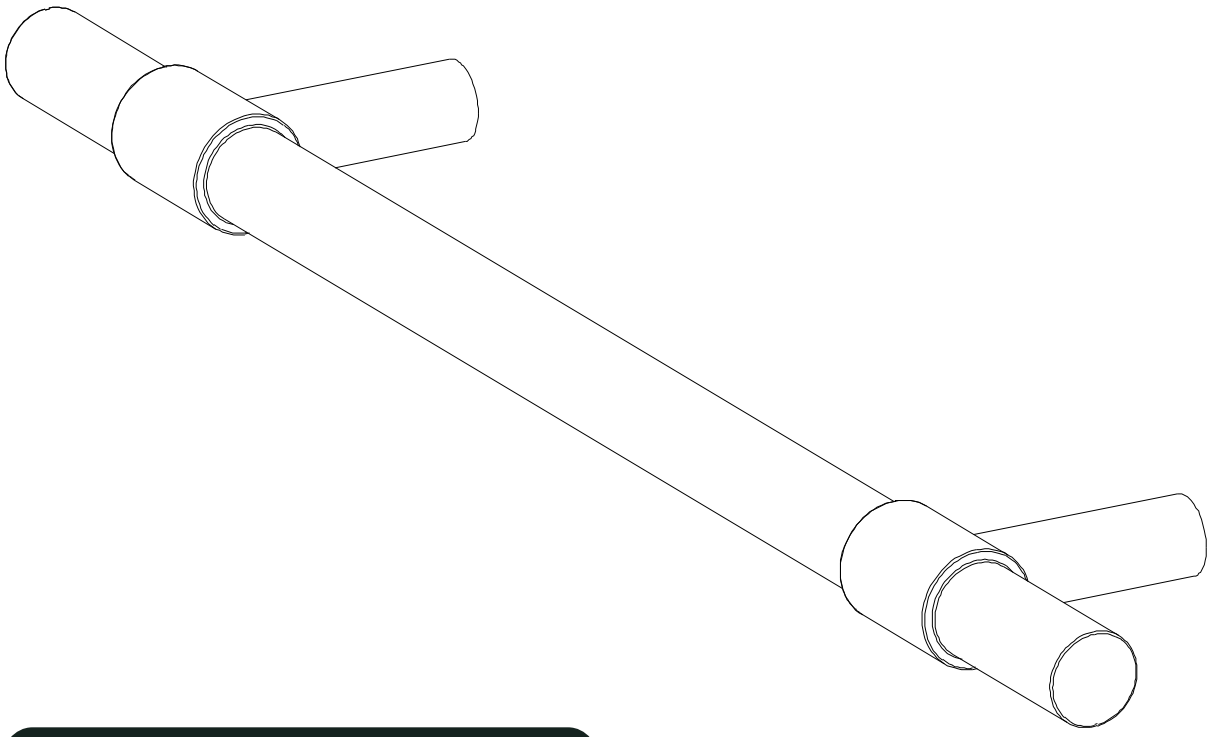

What's in the box

INCLUDED

1x	Lombardy Cabinet Pull Handle
2x	Fixing screws
2x	Fixing washers

Finish Options

Antique Brass	Brushed Nickel	Brushed Brass	Brushed Copper	Gun Metal
AEA	AEA	PVD	PVD	PVD

rainco

Installation Guide

01

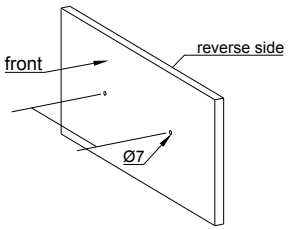

Mark the Fixing Points

Position the handle and mark the two fixing points at 125 mm centres. Use a template when installing multiple handles to maintain consistent alignment.

02

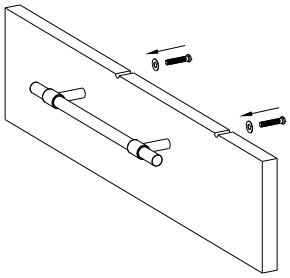

Drill the Holes

Drill two straight Ø7 mm clearance holes through the cabinet panel. Drill from the finished face and use a backing block where possible to reduce breakout.

03

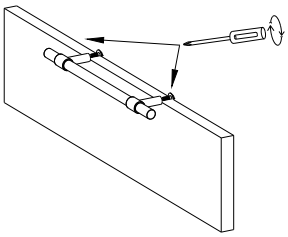

Fit the Handle

Position the handle against the front of the cabinet. From the rear, place a washer onto each fixing screw and insert the screws through the drilled holes. Align the screws with the threaded mounting posts.

04

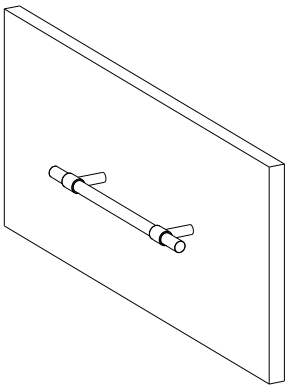

Secure and Check

Tighten both screws evenly until the handle is secure. Do not overtighten. Confirm the handle is straight, firmly mounted and does not move during use.

IMPORTANT

Confirm the 125mm fixing centres against the physical product before drilling. The fixing-screw length must suit the cabinet-panel thickness. Do not overtighten, as this may damage the handle or cabinetry. Support large doors and drawer fronts while marking and drilling. Protect finished surfaces throughout installation.

Care & Maintenance

MILD DETERGENT & WARM WATER

Clean regularly using warm water and mild detergent.

SOFT CLOTH ONLY

Clean and dry with a soft cloth only.

NO ACIDIC OR ABRASIVE CLEANERS

Do not use acidic cleaners, abrasive products, scouring pads or coarse brushes, as these may damage the finish.