rainco

EFFORTLESS WATER CONTROL

FORMA PROGRESSIVE WALL MIXER

AT A GLANCE

BEST FOR	FEEL	INSTALLATION
Everyday bathroom and shower	Single smooth movement to control flow and temperature	Wall-mounted, plumber required

rainco

Front View · Side View

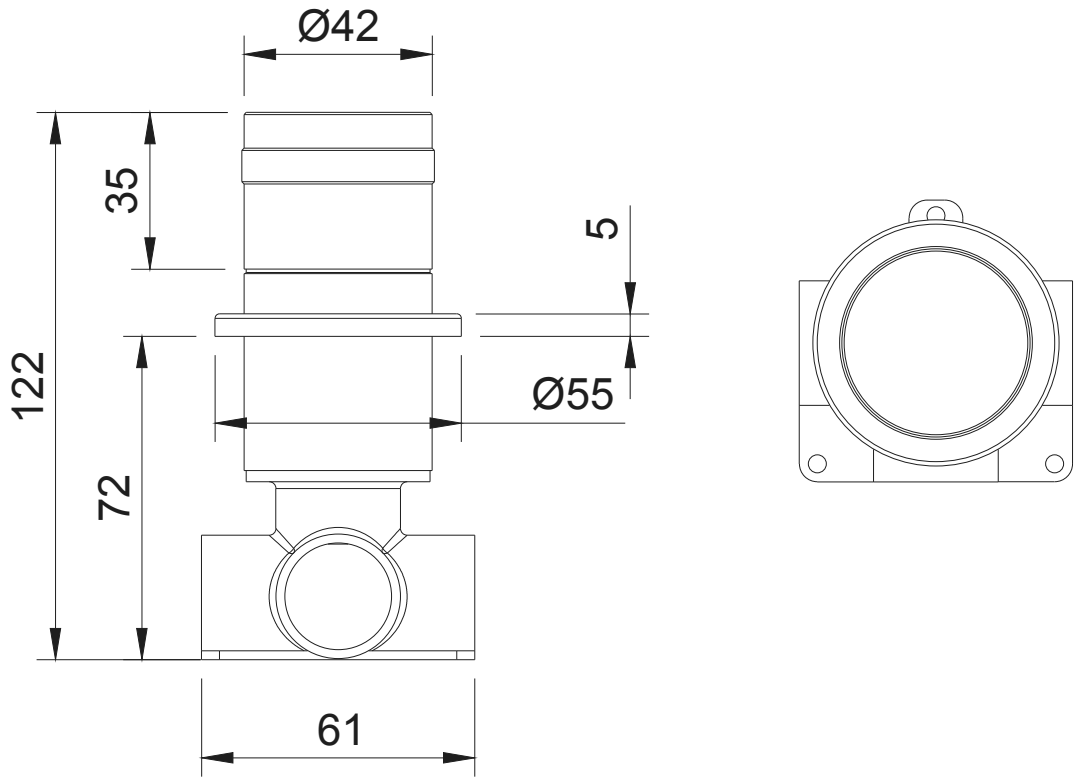

Specifications

MATERIAL

Lead-free **SS304** stainless steel

CARTRIDGE

Citec ceramic Cartridge

PRESSURE RANGE

50–800 kPa

CONNECTIONS

Standard **G1/2”**

MOUNTING

Wall-mounted

DIMENSIONS

Overall Height **122 mm** · Cover Plate Thickness **5 mm** · Mixer Diameter **Ø42 mm** · Cover Ring Diameter **Ø55 mm** · Tile Cut-Out Size **45mm**

rainco

Exploded View

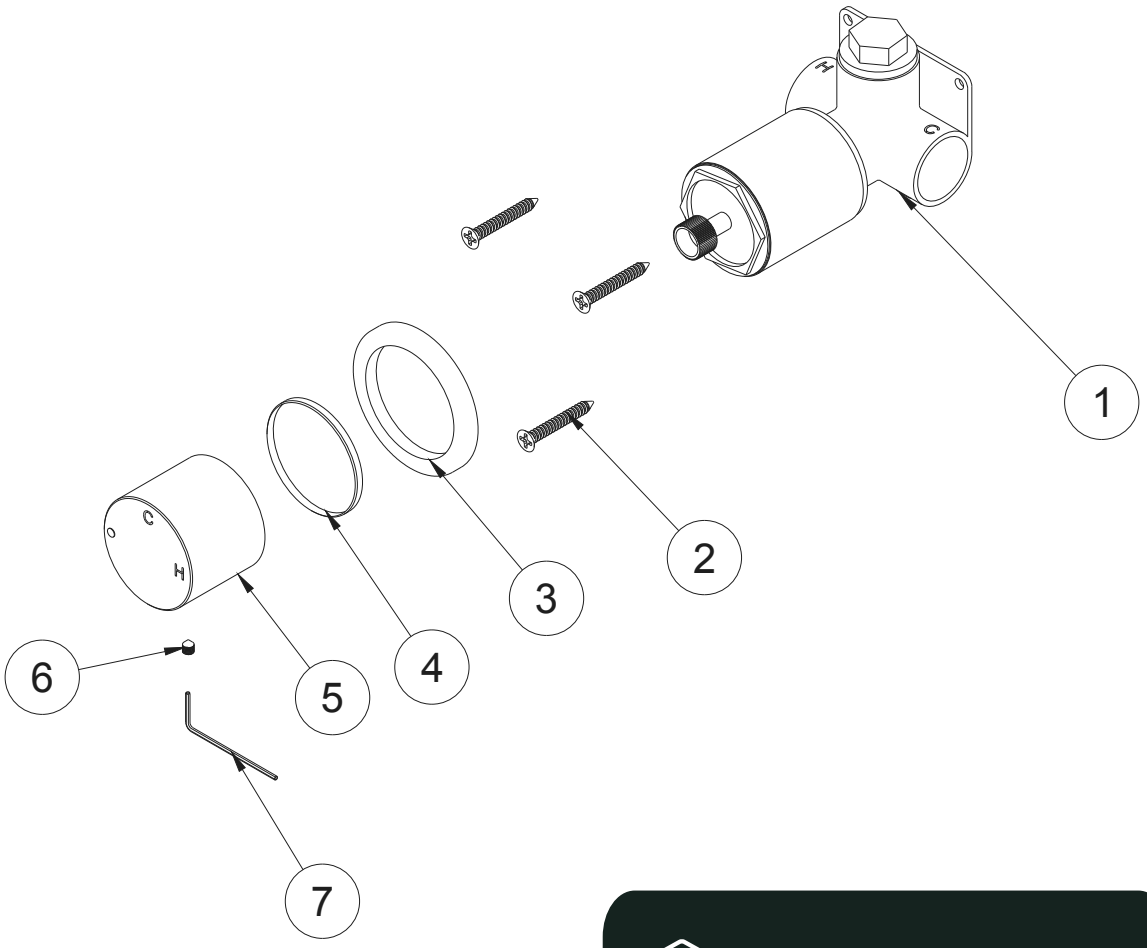

EXPLODED VIEW

1. In-wall Body
2. Fixing Screws
3. Cover Ring
4. Plastic Washer
5. Progressive Mixer Handle
6. Grub Screw
7. Mini Hex Wrench

What's in the box

INCLUDED

1x	In-wall Body
1x	Cover Ring
1x	Progressive Mixer Handle
3x	Fixing Screws
3x	Hollow Wall Anchors
1x	Spare Grub Screw
1x	Mini Hex Wrench

Finish Options

Antique Brass	**Brushed Nickel**	**Brushed Brass**	**Brushed Copper**	**Gun Metal**
AEA	AEA	PVD	PVD	PVD

rainco

Installation Guide

01

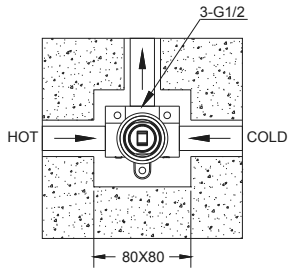

Insert Body

Ensure the protective covers are on while doing this to avoid damages to the cartridge

02

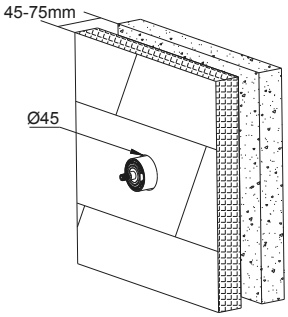

Connect Water Supply

Connect the hot and cold water pipework to the corresponding inlets on the mixer body. Connect the pipework for the outlet

03

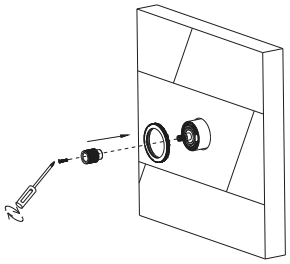

Attach Cover Plates

Fit the cover plates over the mixer body. Ensure the cover plates are correctly positioned and securely fitted.

04

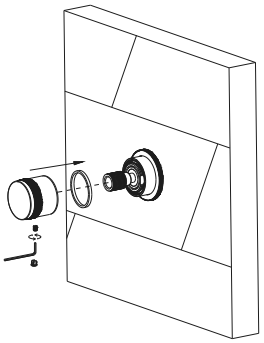

Install Handle

Attach the handle to the mixer body. Secure the handle using the supplied Allen key.

FINAL CHECK

Do not seal or tile until fully tested.

Care & Maintenance

MILD SOAP & WARM WATER

Clean gently to keep the surface bright.

SOFT CLOTH ONLY

Never use scourers or rough pads.

NO CITRUS, BLEACH OR ABRASIVES

These can damage the surface and affect longevity.

Compliance

NCC LEAD-FREE

LESS THAN 0.25%

INSTALLATION STANDARD

AS/NZS 3500.1 & 3500.4