rainco

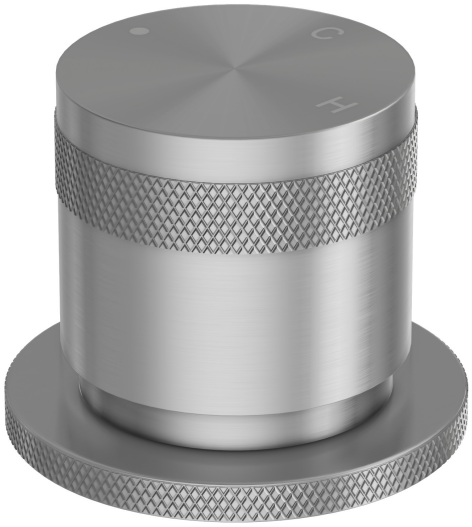

EFFORTLESS WATER CONTROL

FORMA PROGRESSIVE BASIN MIXER

AT A GLANCE

BEST FOR	FEEL	INSTALLATION
Everyday bathroom and inset sinks	Precise temperature control with a single smooth movement	Bench-mounted, plumber required

rainco

Front View · Side View

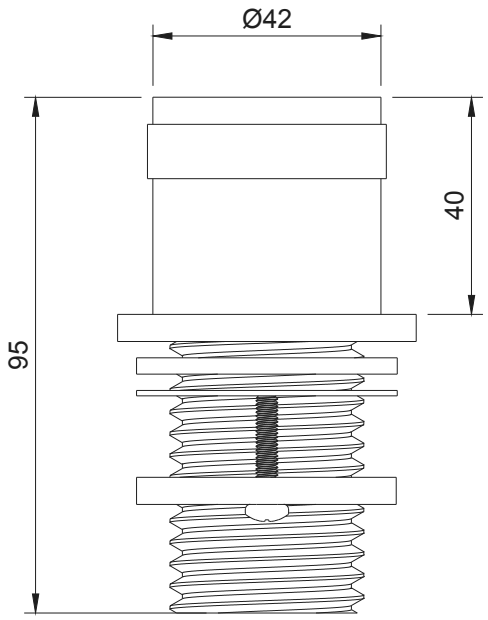

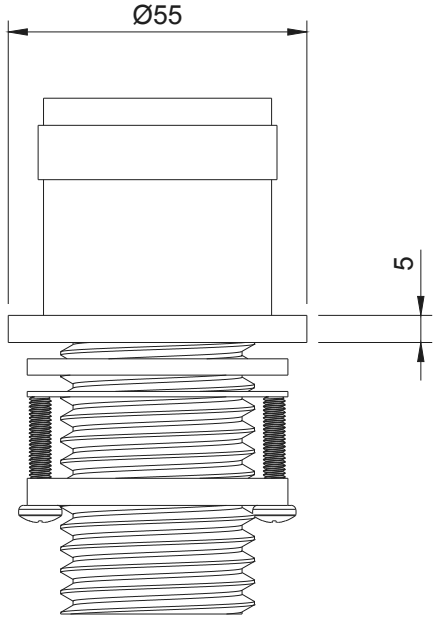

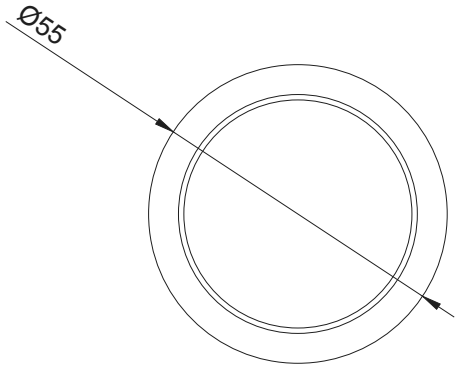

Specifications

MATERIAL

Lead-free **SS304** stainless steel

CARTRIDGE

Citec ceramic Cartridge

PRESSURE RANGE

50–800 kPa

CONNECTIONS

Standard **G1/2”**

MOUNTING

Bench-mounted

DIMENSIONS

Bench projection **45 mm** · Base Ring Thickness **5 mm** · Base ring diameter **Ø55 mm** · Cut-Out Size **Ø35mm**

rainco

Exploded View

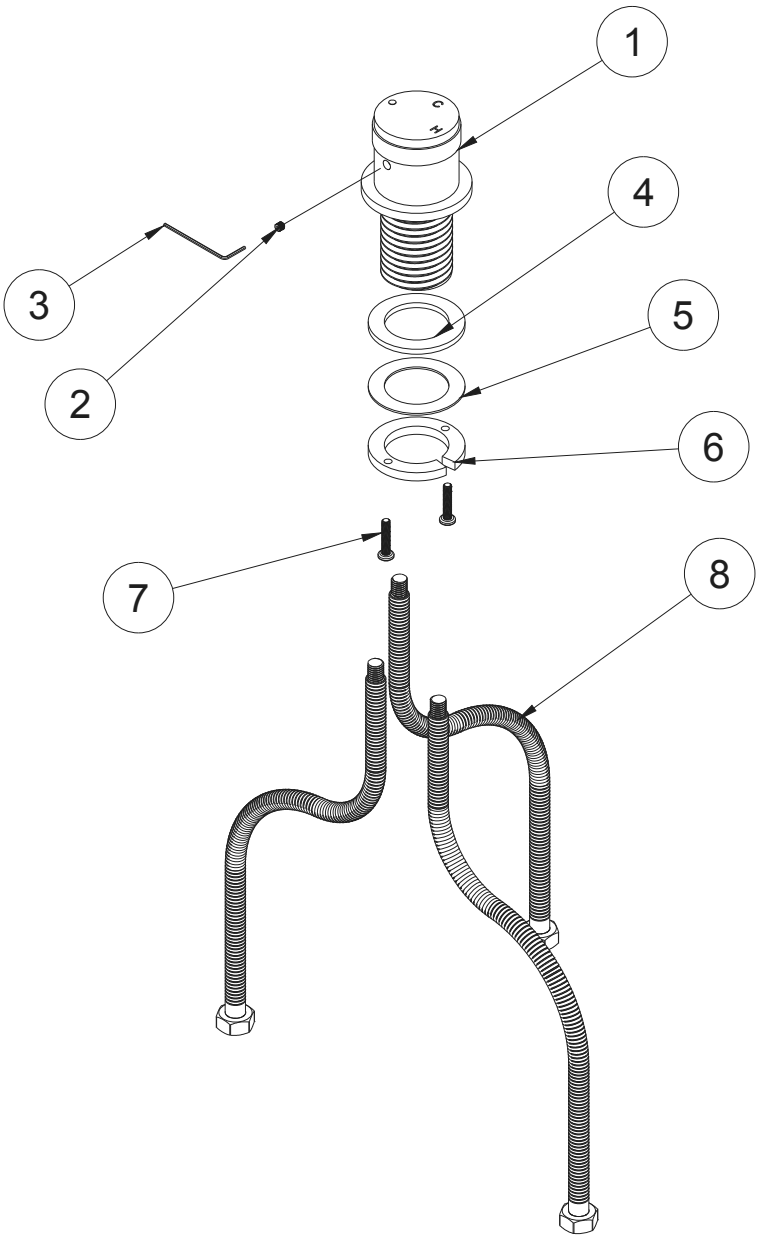

What's in the box

INCLUDED

1x	Progressive Mixer
1x	Mount Nut
2x	Washer
2x	Fixing Screw
1x	Cold Flexir Hose
1x	Hot Flexir Hose
1x	Outlet Flexir Hose
1x	Spare Grub Screw
1x	Mini Hex Wrench

EXPLODED VIEW

1. Progressive Mixer
2. Grub Screw
3. Mini Hex Wrench
4. Rubber
5. Washer
6. Mount Nut
7. Fixing Screws
8. Flexir Hose

Finish Options

Antique Brass	**Brushed Nickel**	**Brushed Brass**	**Brushed Copper**	**Gun Metal**
AEA	AEA	PVD	PVD	PVD

rainco

Installation Guide

PLUMBER REQUIRED AS/NZS 3500

01

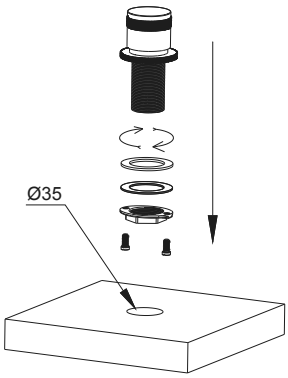

Prepare Installation

Ensure all accessories are ready before installation. The left-hand side is for the hot water inlet and the right-hand side is for the cold water inlet.

02

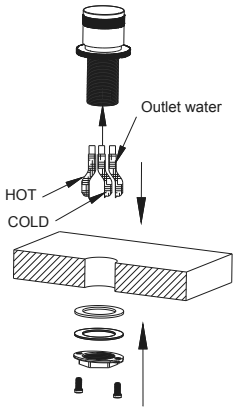

Install Mixer Body

Place the mixer above the installation hole. From underneath, connect the two water hoses to the mixer.

03

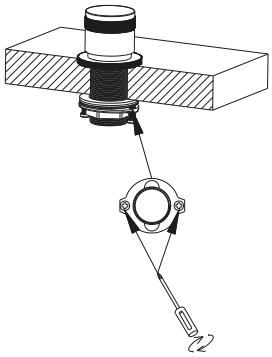

Connect Water Supply

Connect the hot and cold water hoses to the corresponding wall water outlet angle valves. Connect the remaining pipe to the faucet.

04

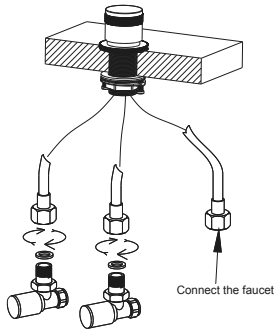

Complete Installation

Once testing is successful, ensure all connections are secure and the mixer is operating correctly.

FINAL CHECK · TURN ON & TEST

Do not seal or tile until fully tested. After installation, run the mixer and inspect all connections for leaks.

Care & Maintenance

MILD SOAP & WARM WATER

Clean gently to keep the surface bright.

SOFT CLOTH ONLY

Never use scourers or rough pads.

NO CITRUS, BLEACH OR ABRASIVES

These can damage the surface and affect longevity.

Compliance

WATERMARK CERTIFIED

AS/NZS 3718

NCC LEAD-FREE

LESS THAN 0.25%

INSTALLATION STANDARD

AS/NZS 3500.1 & 3500.4