rainco

STEADY AND SMOOTH MOVEMENT

FORMA PROGRESSIVE KITCHEN PULL OUT MIXER

AT A GLANCE

BEST FOR	HEIGHT	FEEL	INSTALLATION
Everyday kitchen use	Balanced for overhead clearance without dominating the space	Smooth pull-out action with a veggie spray setting	Bench-mounted, plumber required

rainco

Front View · Side View

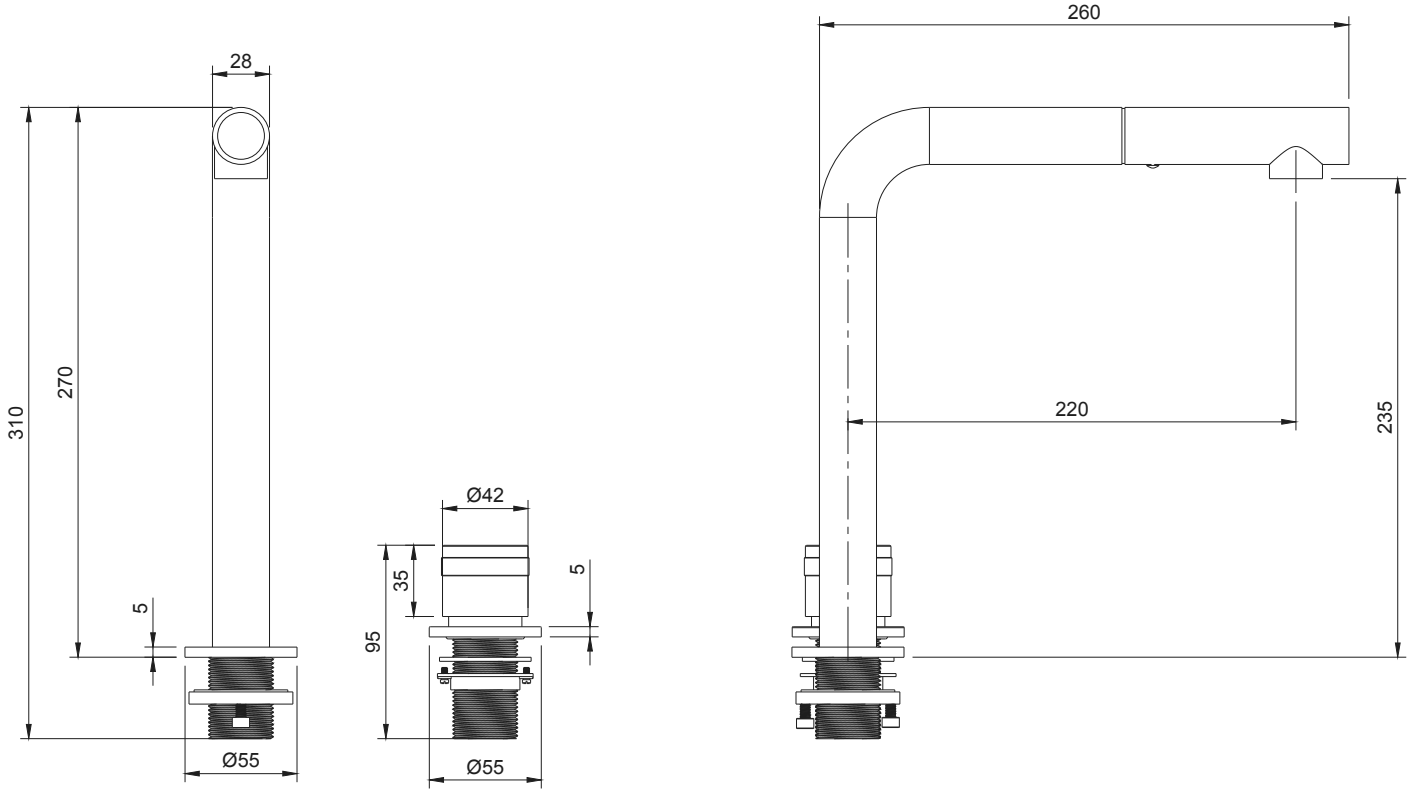

Specifications

MATERIAL

Premium **SS304** Stainless Steel

CARTRIDGE

Citec ceramic cartridge (Ø35mm)

FLOW RATE

6 L/min · WELS 5 Star

PRESSURE RANGE

50–800 kPa

CONNECTIONS

Standard **G1/2”**

MOUNTING

Bench-mounted

DIMENSIONS

Overall Height **270 mm** · Spout Diameter **Ø28mm** · Mixer Diameter **Ø42 mm** · Cut-Out Size **Ø35 mm**

rainco

Exploded View

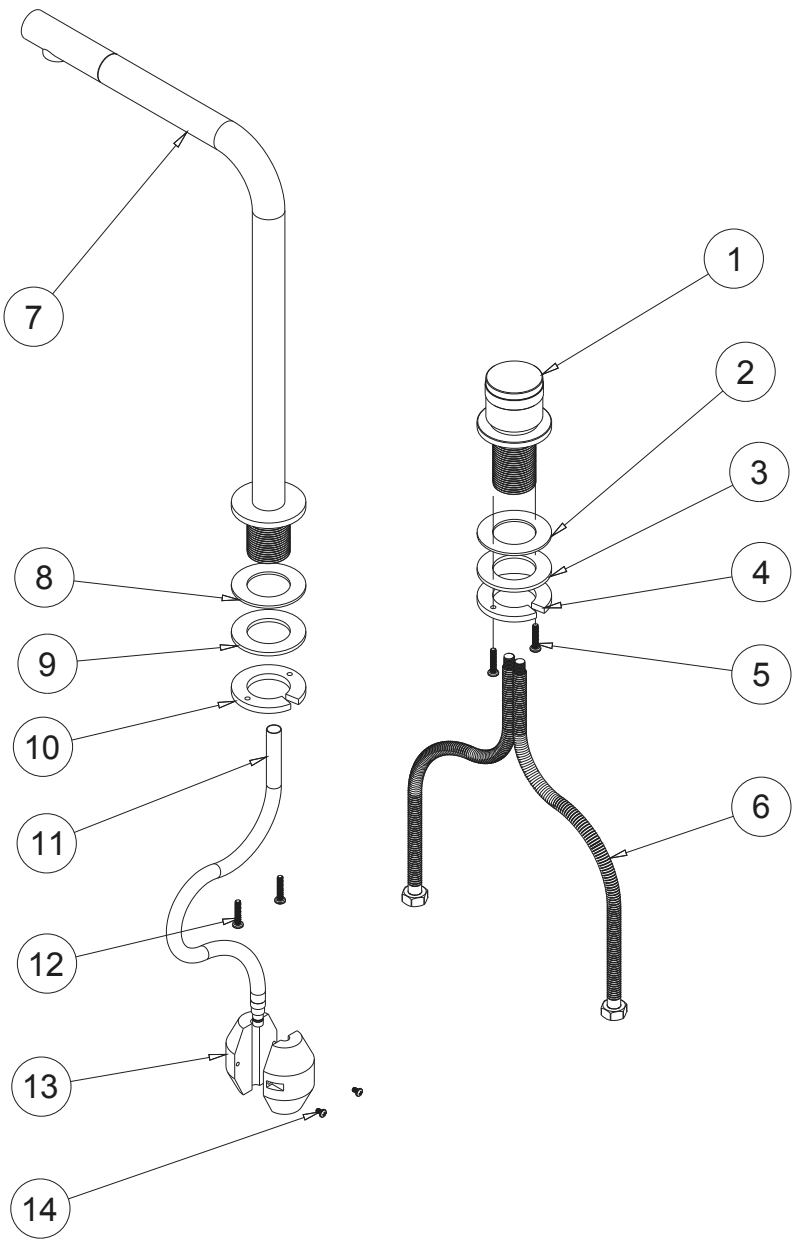

What's in the box

INCLUDED

1x	Pull-out Kitchen Tap
1x	Progressive Mixer
1x	Hot Flexir Hose
1x	Cold Flexir Hose
1x	Pull-down Hose
1x	Weight Ball
2x	Mount Nut
4x	Washers
1x	Mini Hex Wrench
6x	Fixing Screws

EXPLODED VIEW

1. Progressive Mixer
2. Rubber
3. Washer
4. Mount Nut
5. Fixing Screws
6. Flexir Hose
7. Kitchen Tap
8. Rubber
9. Washer
10. Mount Nut
11. Pull-down Hose
12. Mounting Screws
13. Weight ball
14. Fixing Screws

Finish Options

Antique Brass	Brushed Nickel	Brushed Brass	Brushed Copper	Gun Metal
AEA	AEA	PVD	PVD	PVD

rainco

Installation Guide

PLUMBER REQUIRED AS/NZS 3500

01

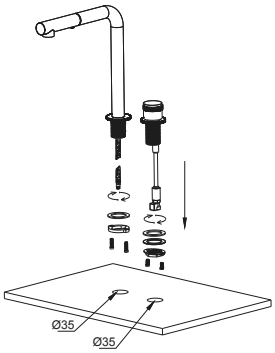

Preperation

Prepare all accessories. Front view: LH = hot, RH = cold. Drill holes: Mixer Ø35 mm / Tap Ø35 mm. Ensure correct alignment.

02

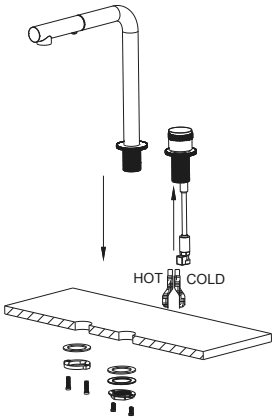

Install Mixer

Place the mixer into the hole. Feed the hoses through and connect them. Secure with fixing accessories. Align correctly and tighten firmly.

03

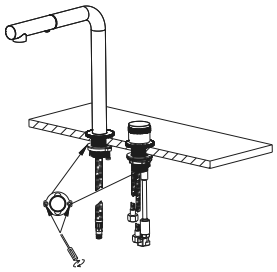

Install Kitchen Tap

Place the tap into the hole. Feed the pull-down hose through. Secure with fixing accessories. Attach the weight ball and tighten firmly.

04

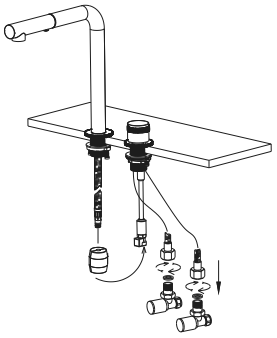

Connect Water Supply

Connect hot and cold hoses to the angle valves. Connect the remaining pipe to the faucet. Make sure hoses are secure, untwisted, and not kinked.

FINAL CHECK · TURN ON & TEST

Slowly open the hot and cold water supply valves and run the mixer. Check all connections carefully and confirm there are no leaks before completing the installation.

Care & Maintenance

MILD SOAP & WARM WATER

Clean gently to keep the surface bright.

SOFT CLOTH ONLY

Never use scourers or rough pads.

NO CITRUS, BLEACH OR ABRASIVES

These can damage the surface and affect longevity.

Compliance

WATERMARK CERTIFIED

AS/NZS 3718

WELS APPROVED

5 STAR · 6 L/MIN

NCC LEAD-FREE

LESS THAN 0.25%

INSTALLATION STANDARD

AS/NZS 3500.1 & 3500.4